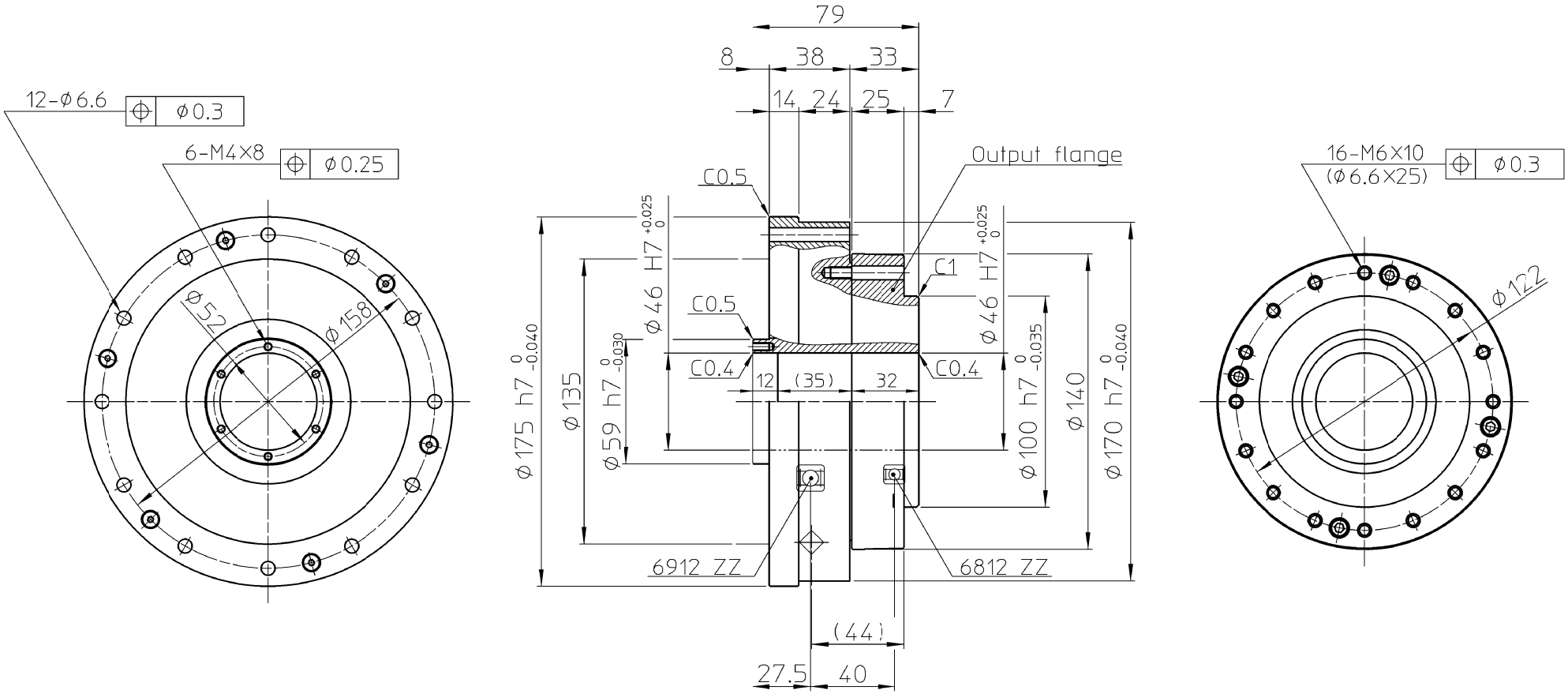

Rated Torque at 2000r/min	Limit for Repeated Peak Torque	Limit for Average Torque	Limit for Momentary Peak Torque
345 N·m	738 N·m	484 N·m	1400 N·m

PROPRIETORSHIP
This drawing (document) is the **PROPERTY** of Harmonic Drive Systems,Inc. and shall not be traced, otherwise copied or used for purposes other than agreed upon, nor communicated to any third party without written permission of Harmonic Drive Systems,Inc.

REMARKS

Lubrication : Harmonic Drive Harmonic Grease SK-1A

Cross Roller Bearing Harmonic Grease 4B No.2

Designing and/or Handling of Harmonic Drive Gears (Harmonic Actuators) has to comply with technical information shown in Harmonic Drive Catalog.

CUSTOMER DRAWING NO.

訂正 REV	来歴 DESCRIPTION

仕様 SPEC

尺度 SCALE 1:2

機械加工無記号公差 GENERAL TOLERANCE	0 ~ 0.5	0.5 ~ 6	6 ~ 30	30 ~ 120	120 ~ 315	315 ~ 1000	1000 ~ 2000
	±0.05	±0.1	±0.2	±0.3	±0.5	±0.8	±1.2

備考 REMARKS : 特記無き角はC0.2以下、すみの丸みはR0.4以下

無記号表面アラサ SURFACES MARKED EXCEPT AS NOTED ▽ → ▽ 50S ▽▽ → ▽▽ 25S ▽▽▽ → ▽▽▽ 6.3S

DWG SIZE A3 | UNIT mm | THIRD ANG

設計 DESIGN	S.Momose	Oct-24-'12
検図 VRFD	H.Tukahara	Oct-24-'12
承認 APPD	T.Yamagishi	Oct-24-'12

HARMONIC DRIVE SYSTEMS INC TOKYO JAPAN

タイトル TITLE ASSEMBLY DRAWING

製品名 ARTICLE SHG-40-100-2UH-LW

図番 DWG No C2A4450 —

本図は(株)ハーモニック・ドライブ・システムズの所有に係わるものです。許可なく第3者に見せたり、トレースその他の複写及び指定された用途以外には使用しないで下さい。

TP-0E3